Portable International Soccer Goal
Installation Notes

SG824RINTPT

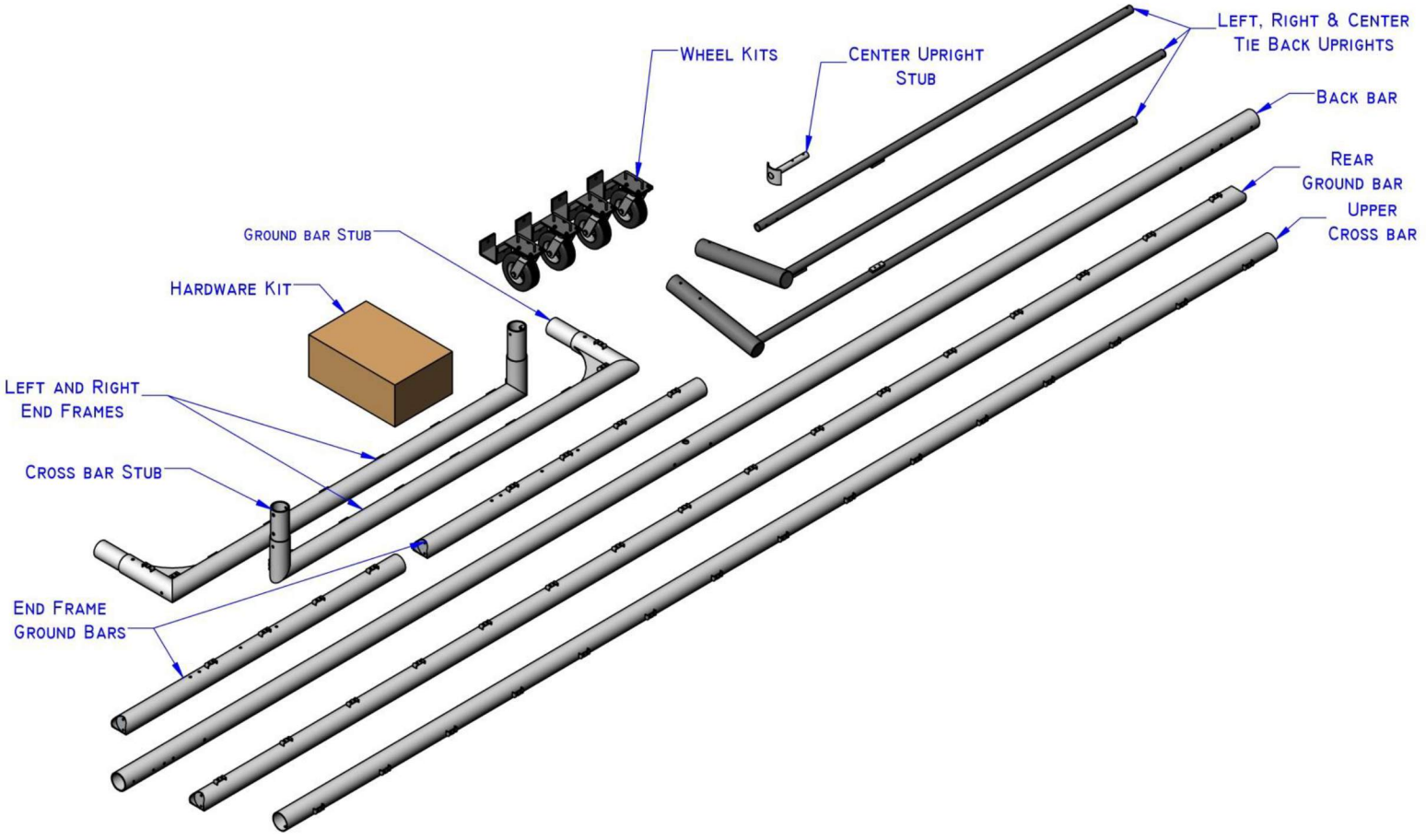

Hardware Kit (Per Goal)

Part Number	Description	QTY
101-HHC1/4-20X.75-SS	1/4-20 X .75” Hex Head Bolt	6
110-FLW1/4-SS	¼” Flat Washer SS	6
110-SLW1/4-SS	¼” Lock Washer	6
100-EYE5/16-18X3-STL-CE	5/16” Closed Eye Bolt With Nut	3
110-FLW5/16-SS	5/16” Flat Washer SS	6
110-SLW5/16-SS	5/16” Lock Washer SS	3
100-HWH3/8-16X1-SER-CS/BP	3/8” X 1” Serrated Flange Hex Bolt	14
101-HHC3/8-16X5-SS	3/8” X 5” Hex Bolt SS	18
101-HHC3/8-16X2.5-SS	3/8” X 2.50” Hex Bolt	2
110-FLW3/8-SS	3/8” Flat Washer SS	36
110-SLW3/8-SS	3/8” Lock Washer SS	22
107-HXN3/8-16-SS	3/8” Hex Nut SS	14
102-HHC1/2-13X6-GALV	1/2-13 X 6.00" Galv. Hex Head Bolt	4
111-FLW1/2-GALV	1/2 Flat Washer Galv.	8
111-SLW1/2-GALV	1/2 Lock Washer Galv.	4
107-HXN1/2-13-GALV	1/2"-13 Galv. Hex Nut	4
ROPE CLEAT	Steel Rope Cleat for Pole System	2
113-209860	5/16” S.S. Spring Hook	3
114-WGSWINCH	Winch	1
000144-01	Lift Bracket	2
SG-000032-36	SG2S Bracket	1
SG-GN-WCBOX	White Soccer Box' Net, 8'Hx24'Wx 6'B x 6'D	1
SG-INT-STRAP	24’ Long Nylon Back Strap	1
TETHER-12	Tether 12’ long (looped one end)	3
Wheel Kit Assembly	Wheel Kit Assembly One Set Per Field	4
SG824RINTPL-JACK	Soccer Goal Jack Note: 1 Per Field	1
SG824RINTPT-21	Lift Bracket	2
SG824RINTPT-22	SG2S Bracket	1

Parts Check:
After receiving your Portable International Soccer Goal; check that hardware and all parts are accounted for (See last page for Sportsfield Specialties contact information).
Tools required to assemble the Soccer Goal are 9/16” and ¾” wrenches, one ladder at a minimum 6’ in height. You will need minimum of 3 people to raise the goal during assembly.

The components to the Portable Soccer Goal are:

(1 each) Left and Right End Frame
(2) End Frame Ground Bar
(1) Upper Crossbar
(1) Rear Ground Bar
(1) Back Bar
(2) Tie Back Uprights
(1) Center Upright
(1) Center Upright Stub
(4) Removable Swivel Caster Wheel Kit
(1) SG824RINTPT Jack
(1) Hardware Kit (See Hardware Kit Table above)
(2) Upper Crossbar Stub
(2) Ground Bar Stub

UPPER CROSSBAR and GROUNDBAR FRAME ASSEMBLY:

Note: Do not tighten hardware until all bolts are in place and Soccer Goal frame is completely assembled.

Begin by placing the Crossbar on a flat surface making sure that the open slots of the net clips are facing out. Figure 1
Next slide the left and right End Frames into the Upper Crossbar and install Six 3/8" – 16 x 1" serrated flange hex bolt at each end to secure the Upper Crossbar Channel to both End Frames. If not installed assemble Crossbar Stub and Ground Bar Stub with 3/8"-16 X 1" serrated flange bolts as shown in Figure 1.

Proceed with the same installation of the Right and Left Ground Bar assemblies See Figure 2.

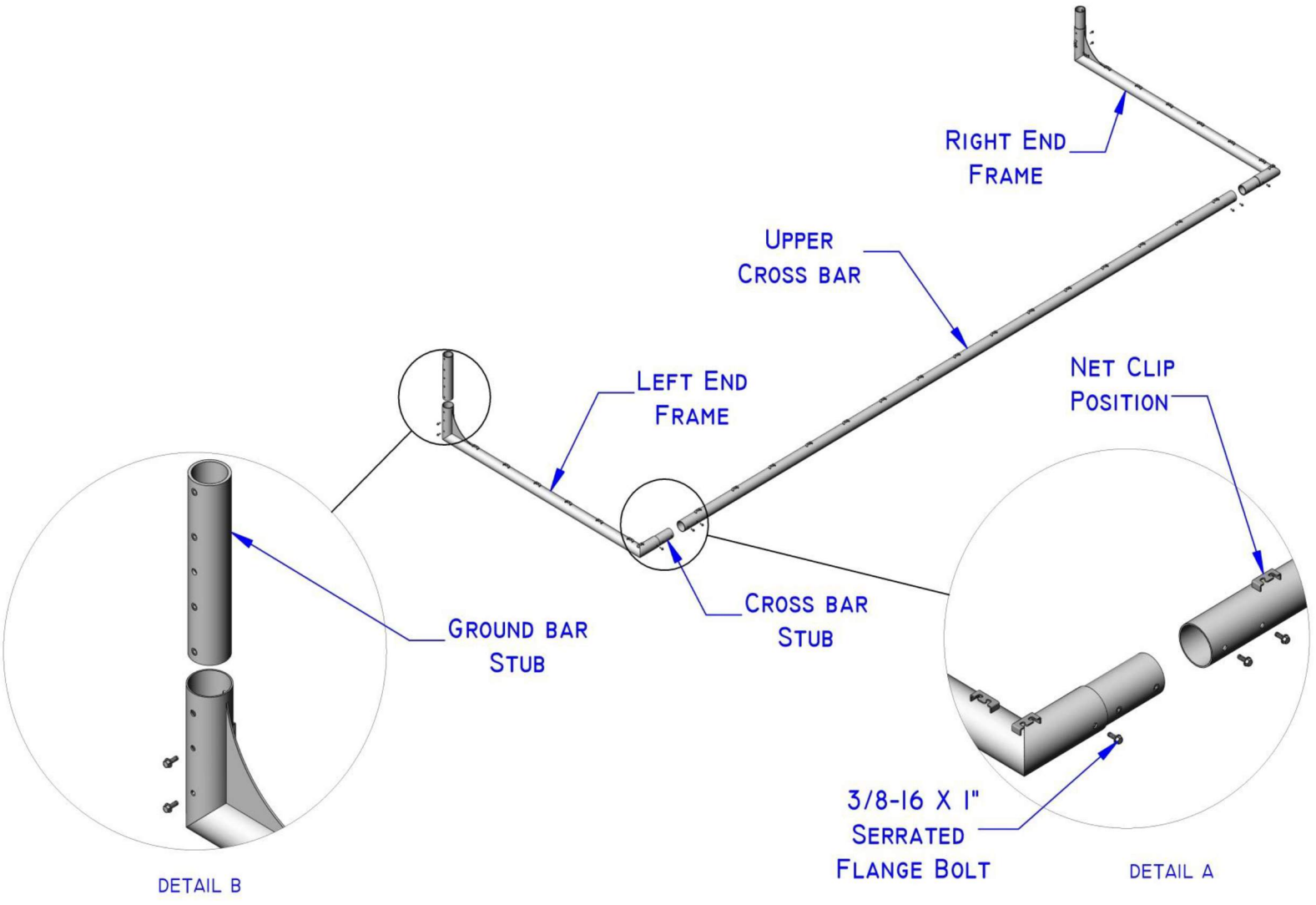
RIGHT END FRAME
UPPER CROSS BAR
LEFT END FRAME
NET CLIP POSITION
GROUND BAR STUB
CROSS BAR STUB
3/8-16 X 1" SERRATED FLANGE BOLT
DETAIL B
DETAIL A

Figure 1

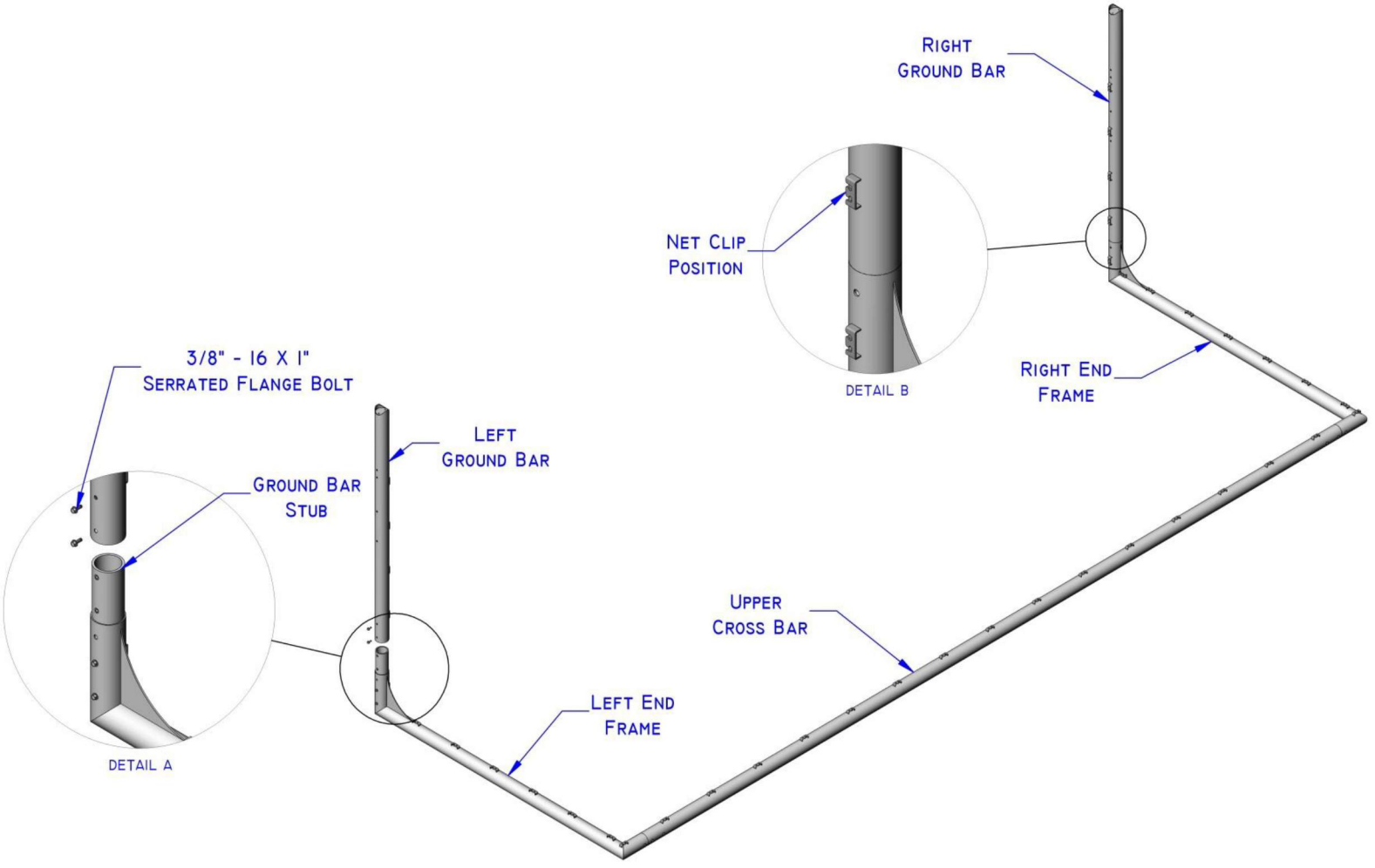

Figure 2

RAISING THE SOCCER GOAL:

With the Crossbar, End Frames, Right and Left Ground bars in place it is now time to raise the goal. A minimum of three people will be needed to lift the goal up so the Rear Ground Bar and Back Bar can be installed.

REAR GROUND BAR and BACK BAR ASSEMBLY:

Rear Ground Bar:
With the net clips open slot facing toward the ground carefully position the Rear Ground Bar in place with the mounting holes of the Right and Left Ground Bars as shown. Install the four 3/8" – 16 x 5" Hex Bolts, four 3/8" Flat Washers, and four Lock Washers. Figure 3

Back Bar:
Attach the Back Bar with four 3/8" – 16 x 5" Hex Bolts, four 3/8" Flat Washers, and four Lock Washers to the ends of the Left and Right Ground bars as shown in figure 3.
You can now tighten all hardware.

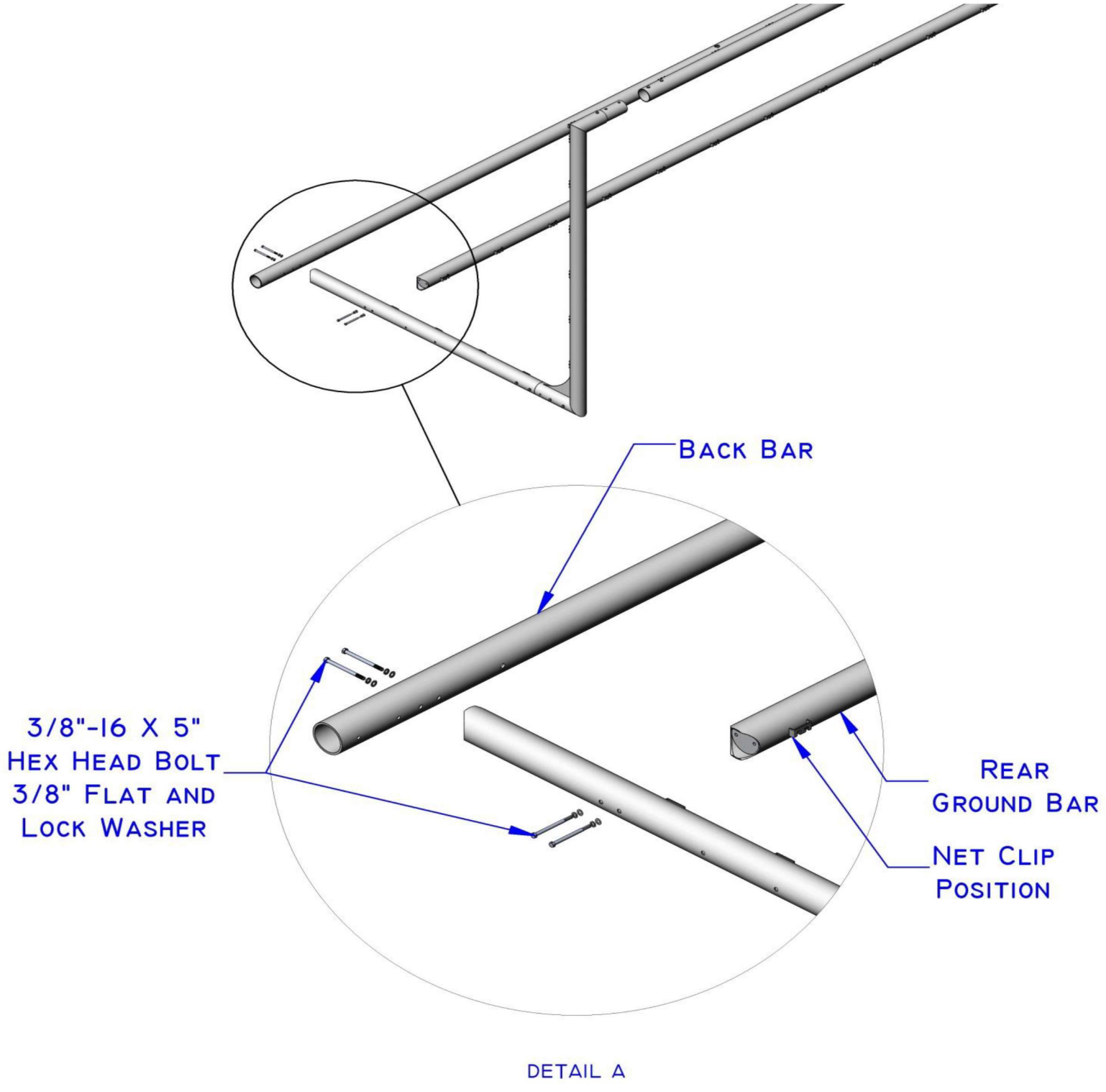

Figure 3

TIE BACK UPRIGHT ASSEMBY:

All three Tie Back Uprights require installation of a 5/16” Closed Eye Bolt with two Flat washers, one Lock Washer, Hex Nut, Rope Cleats and Winch Figure 4.

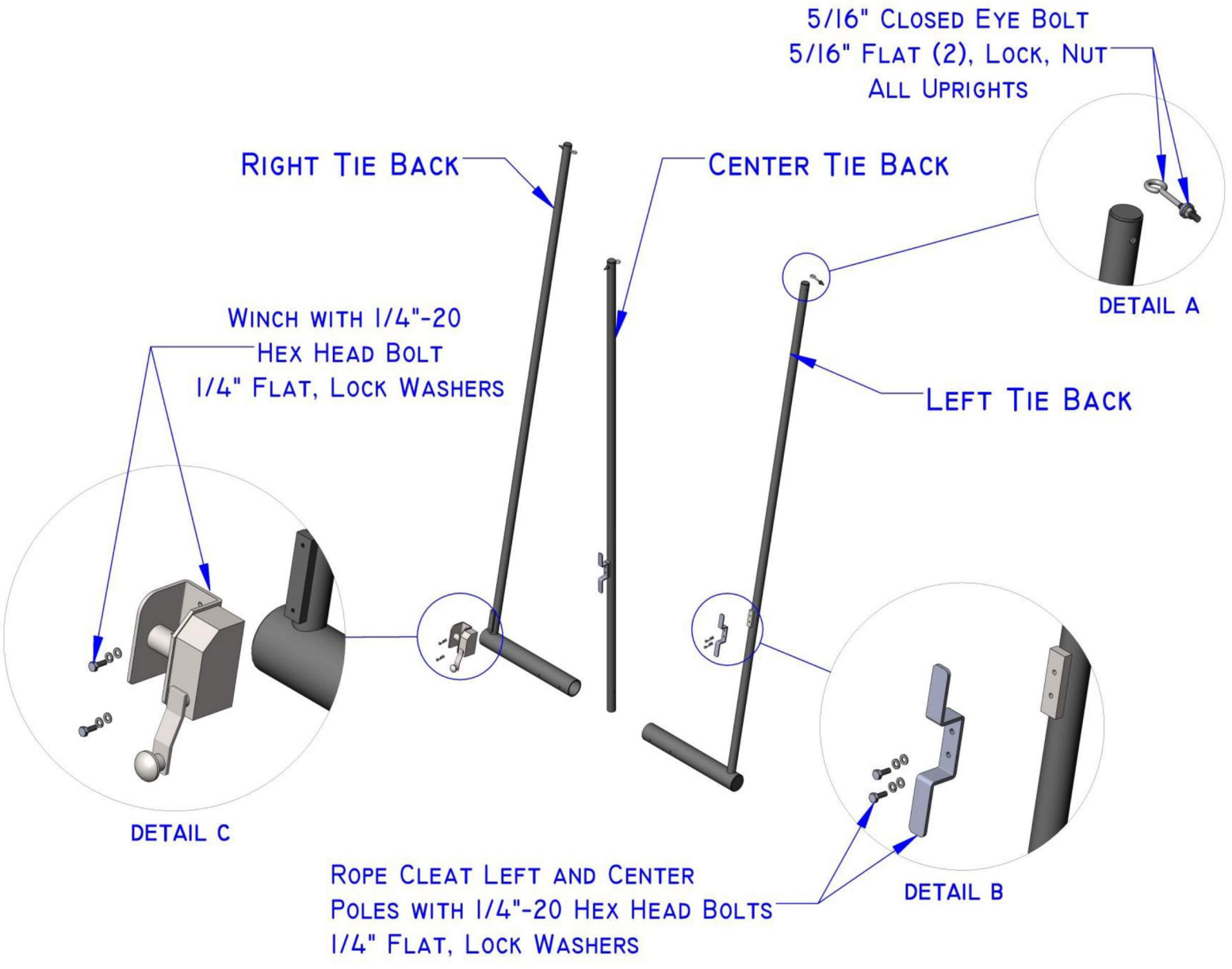

Figure 4

Insert the Tie Back Upright Stubs into each end of the Back Bar with the rope cleat and winch facing to the rear of the Soccer Goal. Align Tie Back Upright mounting holes to the mounting holes in the Back Bar Shown in Figure 5 Detail A. Install four 3/8" – 16 x 5" Hex Bolt, eight 3/8" Flat Washers, Four Lock Washers and two 3/8" – 16 Hex Nuts. The Tie Back Upright with the worm gear tension winch installs to the right rear when facing the front of the Soccer Goal.

UPRIGHT STUB AND CENTER UPRIGHT ASSEMBLY Detail B

To install the Upright Stub lift the Back Bar (Soccer Goal) up and insert the Upright Stub from the bottom through the center hole in the Back Bar. Slide the Center Upright with rope cleat facing away from Soccer Goal over the upright stub and align mounting holes. Install two 3/8" – 16 X 2-1/2" Hex Bolts, four 3/8" Flat washers, two Lock Washers and two 3/8" – 16 Hex Nuts shown in Figure 5 Detail B.

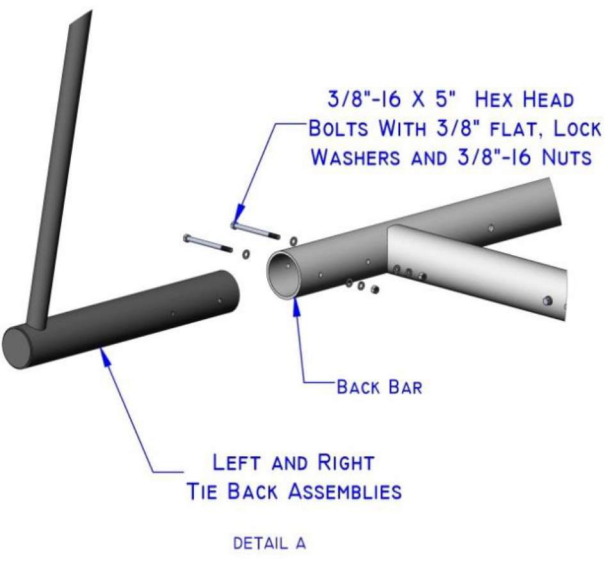

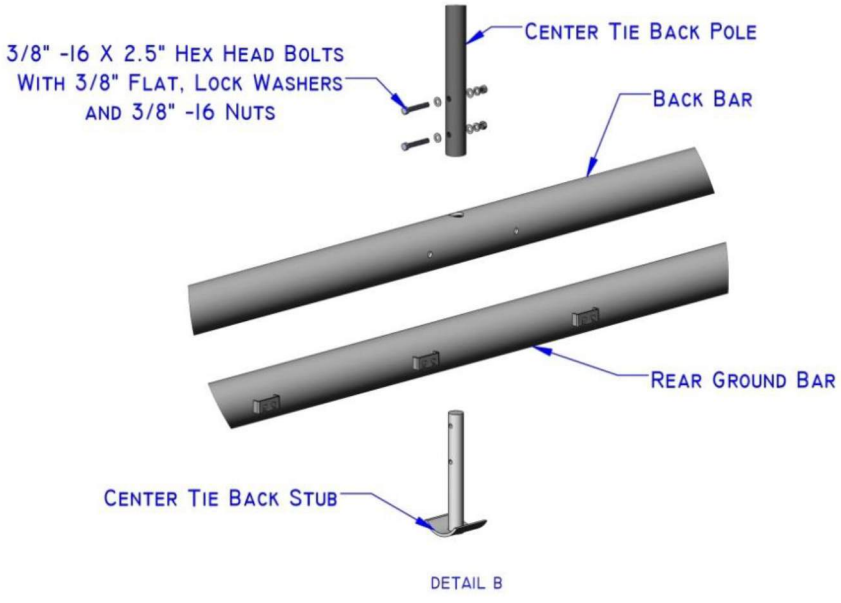

Figure 5

Soccer Goal Frame is all assembled and all hardware can be tighten. See Figure 6.

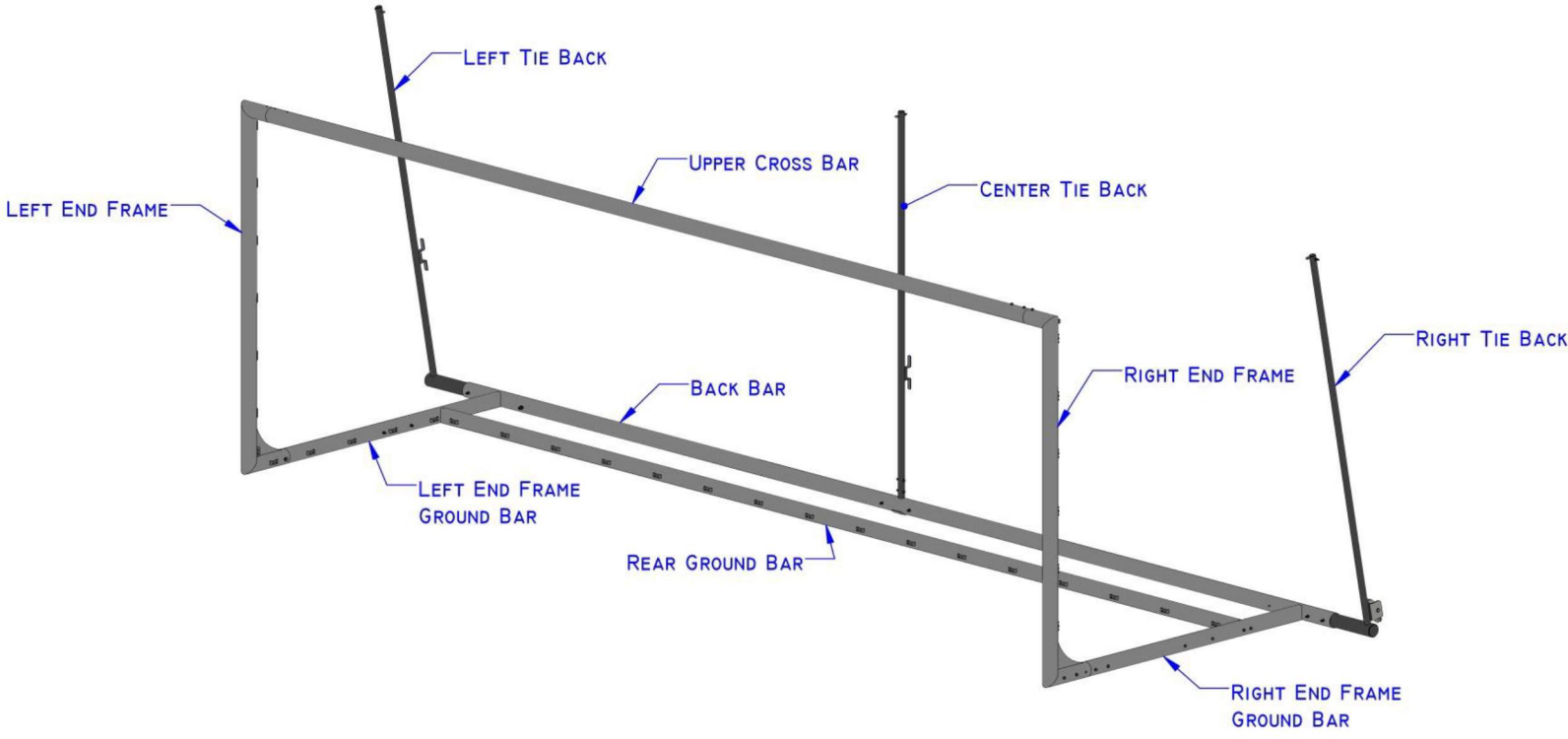

Figure 6

SOCCER GOAL NET INSTALLATION:

With the Soccer Goal Frame fully assembled and all hardware tight the soccer goal net can now be attached to the Soccer Goal frame.

Begin by unfolding the Soccer net within the Soccer Goal Frame and locate the upper corners of the net at each end. The top corner of the soccer goal net is where the Crossbar meets the Upright. **Note: One upper corner of the net is usually marked by a tag.**

Begin by finding the center of the net between the two upper net corners and attach the center of the net to the middle clip on the upper crossbar.
The net is attached by first pushing the outer binding through the clip, then securing in the slot see Figure 7.

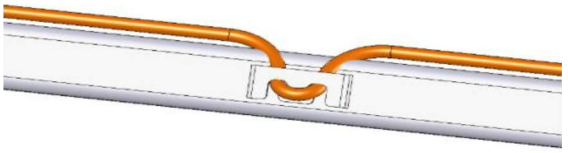

Figure 7

Move along the Cross bar attaching the net to every clip pulling down on the outer binding at each step to make the net across the top as tight as possible and to make sure the upper net corners **end** at the last net cleat on the frame cross bar. Continue securing the net down both uprights along the left and right ground bars making sure the net corners **end** at each directional change of the net. Finally, attach the net along the Rear Ground Bar.

Note: To keep the corners in place tie the net to the Upper Crossbar and Uprights Net Clips with the small cords attached to the nets at each corner. Tie off the bottom corners in the same fashion.

NYLON BACK STRAP AND TIE BACK UPRIGHT TETHER ASSEMBLY:

Included in the hardware kit is a 24' long white Nylon back strap. The strap will have at each end a D-Ring sewn in place with a third D-Ring in the middle of the strap. This strap will support the back of the net and help maintain the box shape of the net.

Starting from the left Tie Back support pole weave the strap through each hole pattern at the back net cord location. The Back Strap provides support to the back of the net cord and when stretched pulls the back of the net straight to form the top section of the Soccer Goal net box.
Attach the back corners of the net with the supplied 5/16 spring clip through the tether D-rings in the strap. See figure 8

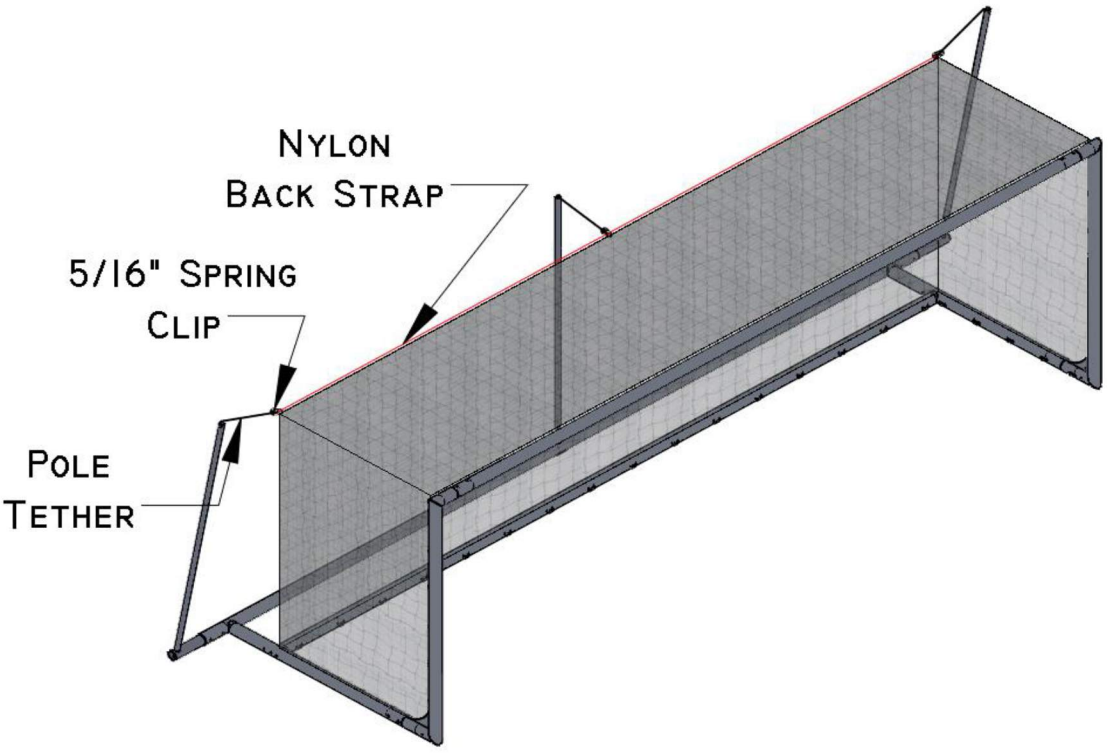

Figure 8

Once the Net strap is installed, (Looking from the front of the Soccer Goal) gather the top left rear corner of the net and hook the net corner along with the end of the Nylon Strap and clip the corner to the 12’ long pole tether as shown in Figure 9. Thread the pole tether through the closed eye bolt at the top of the tie back upright leaving approximately 20” of tether between the net corner and the tie back upright. Tie off the tether to the back of the tie back upright rope cleat.
Next move to the center Upright and hook the second 12’ pole tether and clip to the nylon strap middle loop and tie off at the 20” length as performed on the left side tie back upright.

Figure 9

Stretching the net to form the soccer goal box shape:

The right side Tie Back Upright that has the worm gear tension winch will be used to pull the net into shape.
Feed tether through the eye bolt and hole in the winch shaft and turn winch to take up the tether slack.
Clip to the top right net corner and nylon strap and turn winch to take up the rest of the tether slack and draw the net tight to form the box shape. See Figure 9.

Note: Some adjusting of the net at other net locations may be necessary to achieve the desired box shape of the net.
See figure 10A, B, C and D of final net assembly.

Figure 10A

Figure 10B

Figure 10C

Figure 10D

SOCCER GOAL LIFTING COMPONENTS:

The international Soccer Goal is equipped with two lifting brackets that are bolted one to each side of the end frame ground bars and one manual crank jack.

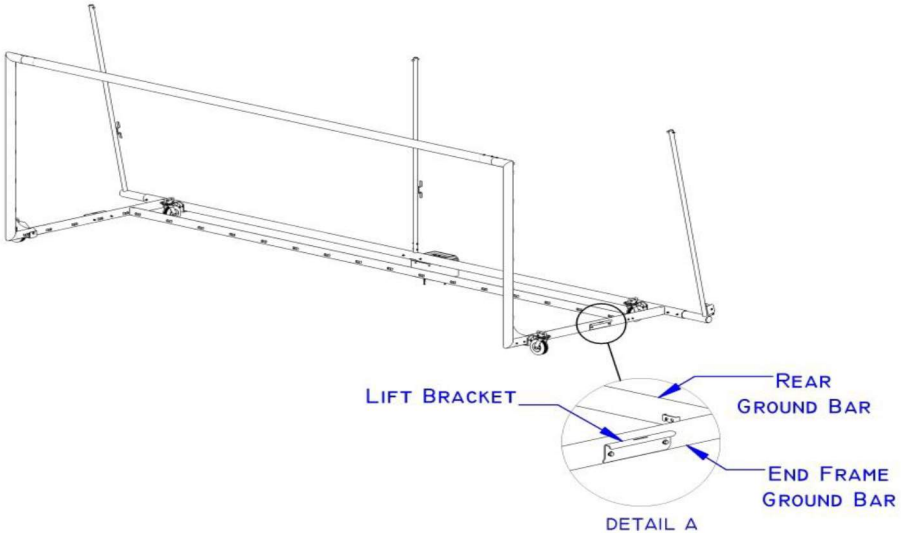

The lifting components allow the installer to lift each side of the Soccer Goal during the installation of the supplied wheel kits.
To lift the Soccer Goal, position the jack plate lip to the inside lip of the bracket and turn the jack crank to lift the Soccer Goal to the required height so the wheel kits can be installed to the ground bars. See Figure 11

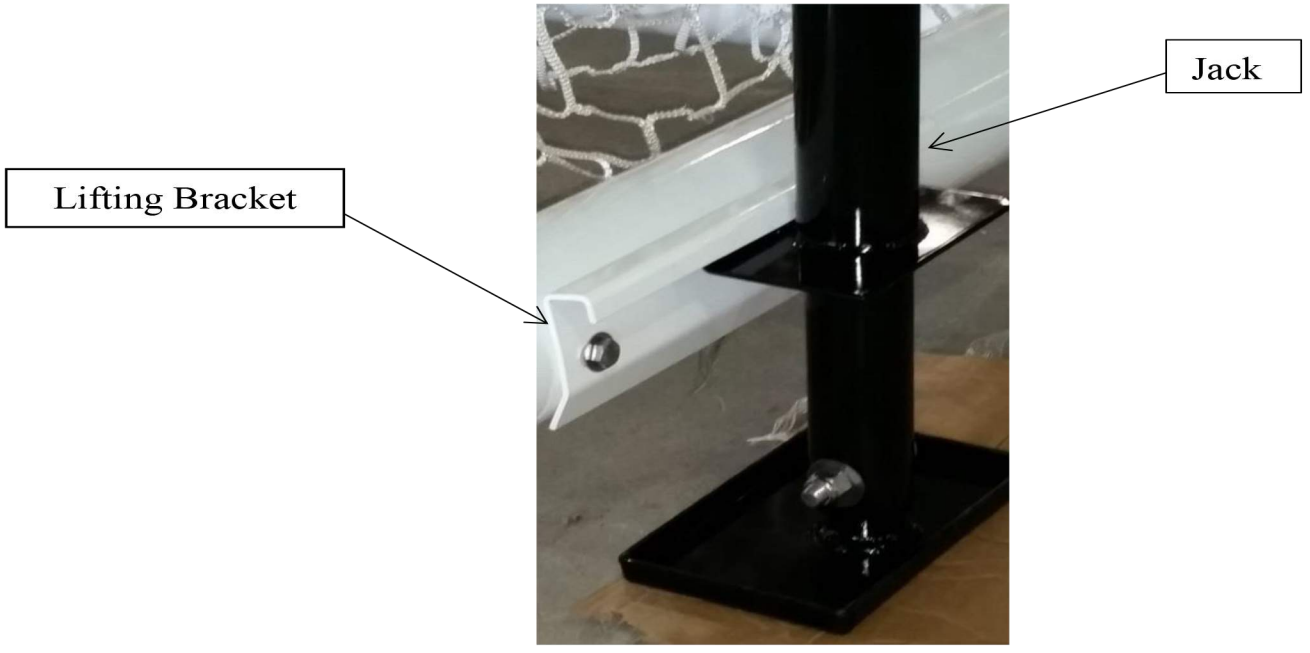

Figure 11

INSTALLATION OF THE WHEEL KITS:

With the Soccer Goal positioned at the proper height you can now install the wheel kit assembly.
The wheel kits are attached to the End Frame ground bar and Back Bar by aligning the wheel kit mounting hole with the ½" hole in the side of the ground bars and back bar as shown in Figure 12.

Install the supplied ½" X 6" long galvanized bolt with a galvanized flat washer at the bolt head through the wheel kit and ground bar mounting holes. Install the ½" galvanized flat, Lock washer and 1/2 " hex nut to the bolt and tighten. Repeat for each wheel kit. Lower the soccer goal so the wheel kits support the Soccer Goal and repeat the same procedure on the opposite side.

After all wheel kits are installed the Soccer Goal can be moved into position on the playing field. Reverse the above procedure to remove the wheel kits when not in use.

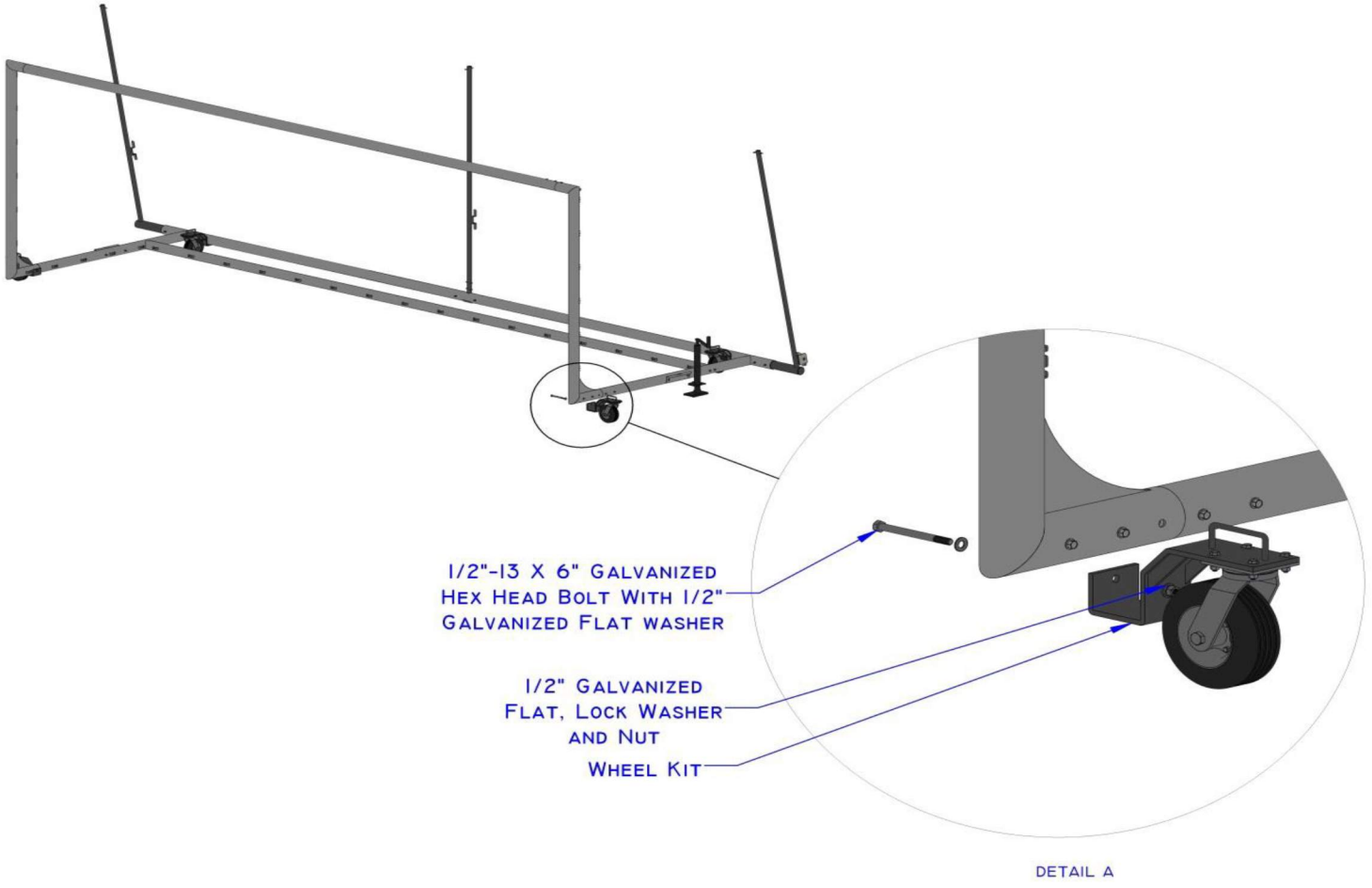

Figure 12

Soccer Goal Installation Complete

SEE BELOW FOR VALUABLE SAFETY TIPS RELATED TO SOCCER GOALS

Soccer Goal Safety Tips

* Securely anchor at ALL times. Crossbar strongly suggests the SG2S saftey system.

* Anchor or chain goals to themselves in a folded down position, or to nearby fence post, dugout, or any other sturdy fixture when not in use. If this is not practical, store movable soccer goals in a place where children will not have access to them.

* Remove nets when goals are not in use.

* Check for structural integrity and secure connecting hardware before every use. Replace damaged or missing parts or fasteners immediately.

* NEVER allow anyone to climb on the net or goal framework.

* Ensure safety/warning labels are clearly visible (placed under the crossbar and on the sides of the front-posts at eye level).

* Fully disassemble goals for seasonal storage.

* Exercise extreme caution and provide adequate manpower to moving goals. Only authorized and properly trained personnel should move soccer goals.

* Always instruct players regarding the safe handling of and the potential dangers associated with movable soccer goals.

* Movable soccer goals should only be used on LEVEL (flat) fields.

SG2S®

For Goal SG824RINTPT

Soccer Goal Safety System

United States Patent #7,331,880 – Issued February 19, 2008
United States Patent #7,527,569 – Issued May 5, 2009

Tools/Equipment Required:

1. **Excavation Equipment**
2. **Measuring Devices; 6 ft. Folding Rule, Retractable Tape Measure.**
3. **Bubble Level.**
4. **2x6's For Constructing Concrete Form.**

(3) Bags of Cement (per SG2S®), Mixing Tools, Hand Trowel and Water.

Side View **Front View**

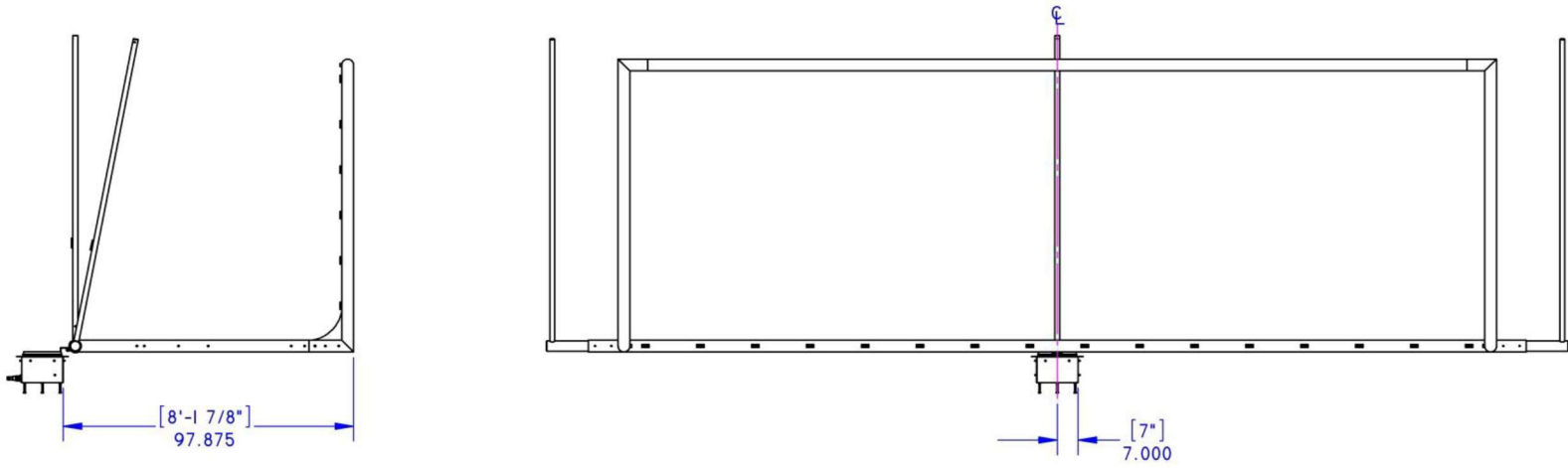

From Front of 4" Goal Line
to Front Outside Wall of **SG2S®**

Figure 1

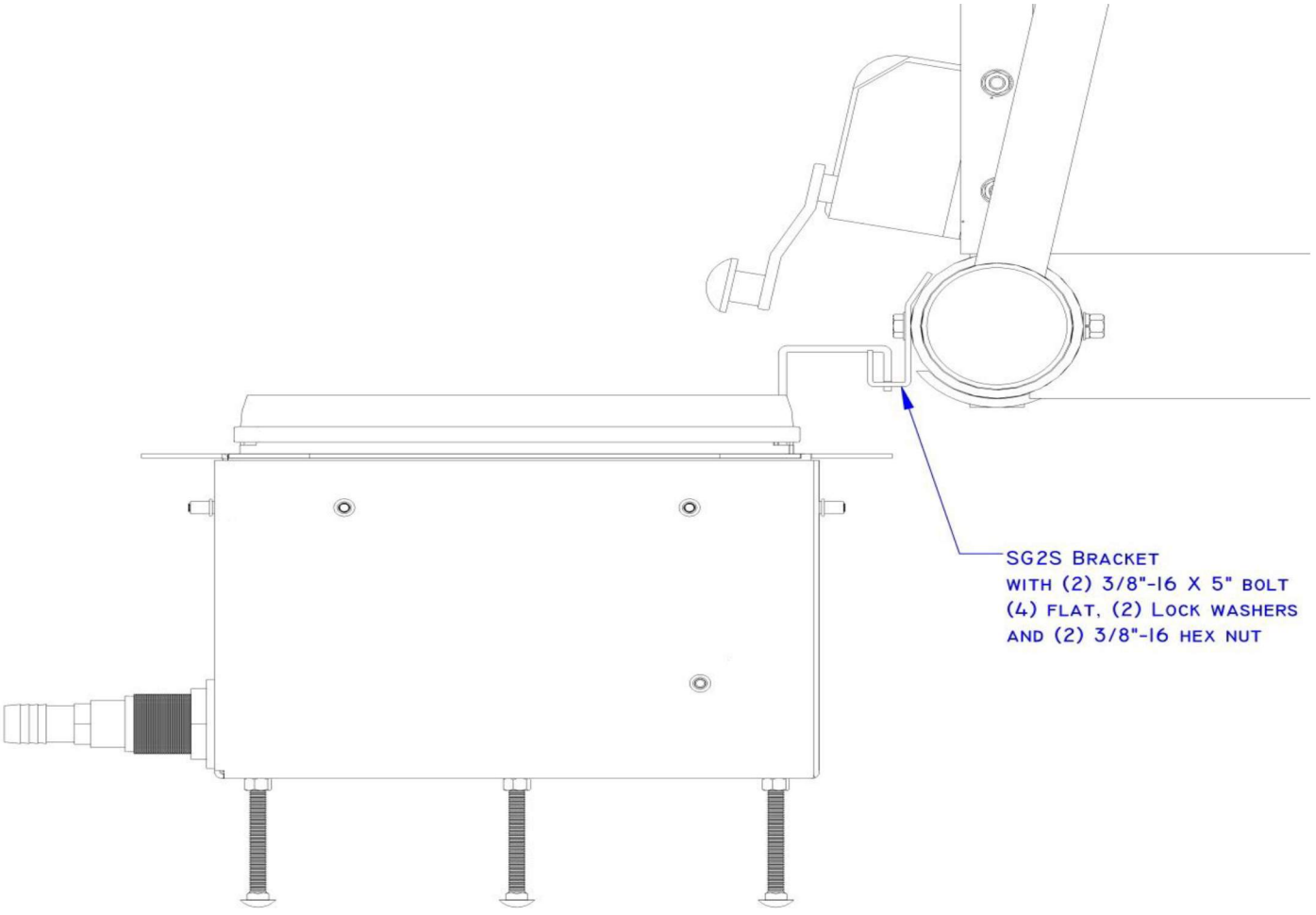

Figure 1

Installation

Establish the location of the SG2S® per plans and specifications. See **Figure 1** for specific orientation and location of the SG2S® Soccer Safety System. (Refer to all SG2S instructions for SG2SNG install except depth as noted in "For Natural Grass Construction")

After establishing the location of the SG2S®, mark accordingly and excavate a hole to accept a 2' x 2' x 6" form. Please note: Consult your local building codes, local ordinances, architects' specifications or building contractor for possible variances from this minimum amount (See **Figure 2** for manufactures recommended vertical location of the SG2S®).

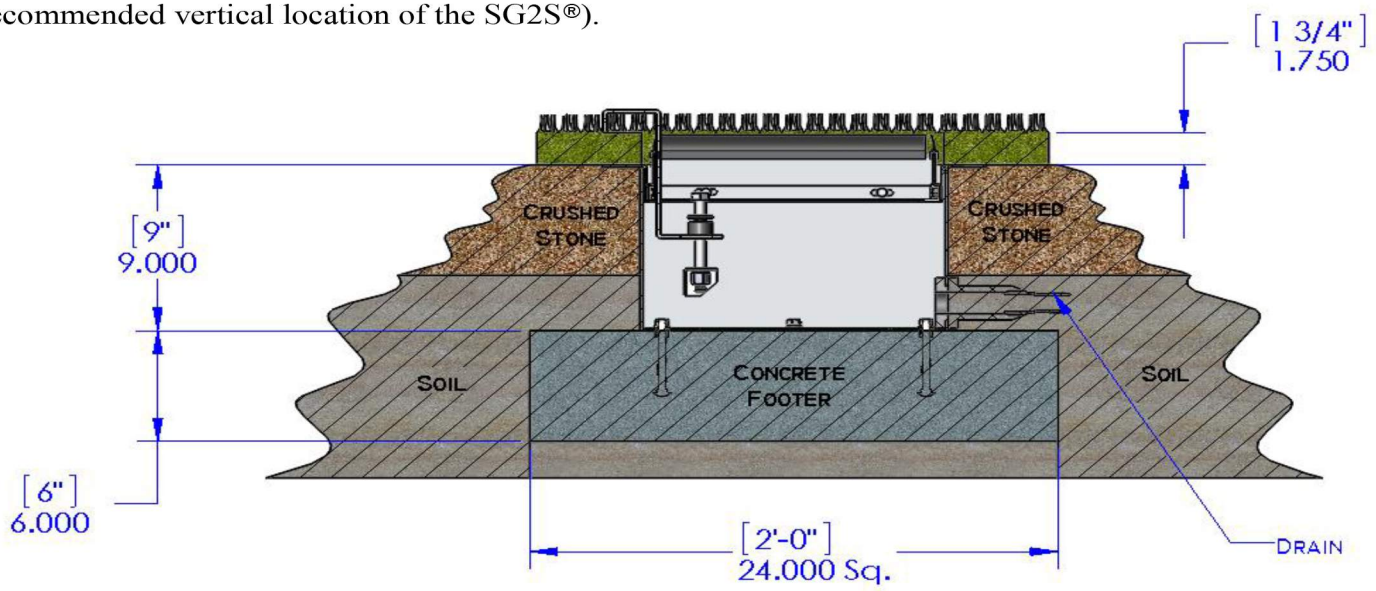

Figure 2

For In-Fill Turf Construction

After constructing a wooden form, pour concrete into the form. Next assemble (4) 3/8-16 stainless steel carriage bolts onto the SG2S® box using flat washers, lock washers and hex nuts. Ascertain that there is about 3" of space between the head of the carriage bolt and the bottom lip of the SG2S® box. Embed the carriage bolt portion of the assembled SG2S® box into the fresh concrete. Check the orientation and correct if necessary. The SG2S® box should sit on the top surface of the concrete. Let concrete cure and back fill.

When correctly installed, the top edge of the SG2S® Soccer Goal Safety System should be flush to the crushed stone sub-base. If the construction of the In-Fill Turf field requires performance layer or padding then the top edge must be flush with the top side of the performance layer or padding.

After the In-Fill carpet has been installed, be sure that the backing of the turf is firmly attached to nailer edge on all (4) sides of the SG2S® box. Carpet can also be glued directly onto the lid.

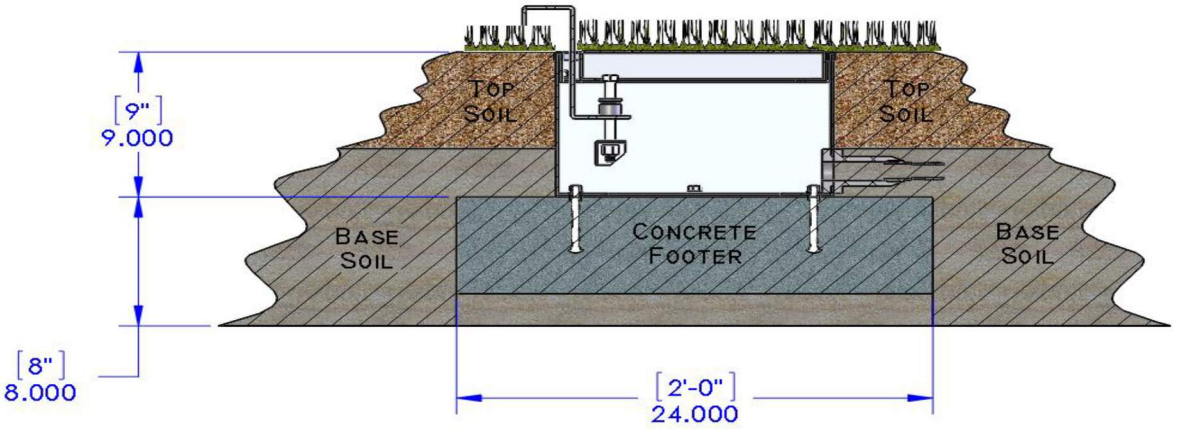

Figure 3

For Natural Grass Construction

For natural grass fields the installation follows the same procedure as the In-Fill installation with one exception: the top edge of the SG2SNG box should be flush with finish grade **Figure 3**. The lid should be covered with Synthetic Turf.

SG2S® Operation

The purpose of the SG2S® Soccer Goal Safety System is to reduce horizontal and vertical movement of the Soccer Goal. To operate the clamp system, begin by removing the Cover exposing the internal mechanical system of the SG2S®. Rotate clamp into the vertical position and align the vertical slot with the pan head screw.

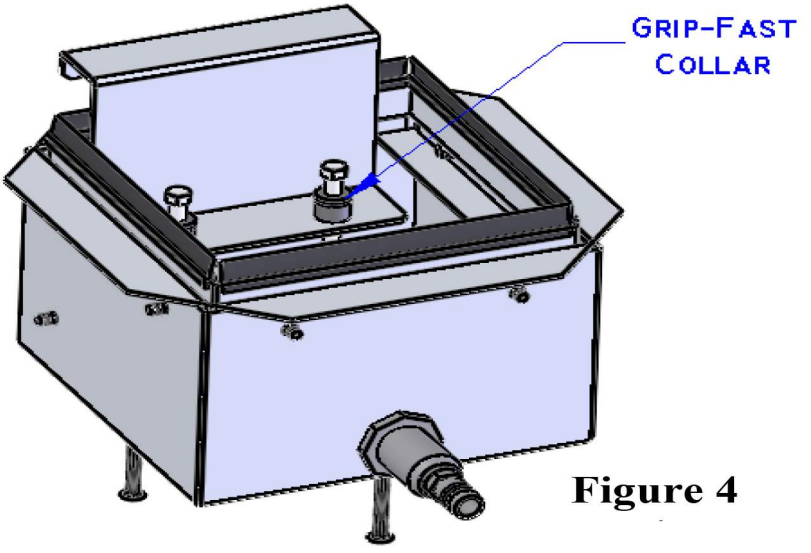

Figure 4

Position the center of the Soccer Goal's ground bar so the "U" shaped part of the clamp rests over the ground bar. Tighten the clamp firmly using (2) Grip-Fast Collars. Check the Soccer Goal for any movement and re-adjust if necessary. Replace the Cover for play. Prior to use of Soccer Goals, the SG2S® Soccer Goal Safety System should be inspected for any required adjustments. To remove the Soccer Goals from the SG2S® Soccer Goal Safety System, simply reverse the above procedure.

REPLACEMENT PARTS

Contact us at 1-401-651-7702 for replacement hardware.

Crossbar, LLC
3140 W 8th Ave
Denver, CO 80204
www.crossbar.life
hello@crossbar.life